动力引出线 Power Connector					抱闸引出线 Brake Connector		编码器引出线 Encoder Connector							
位号 Terminal Number	A	B	C	D	1	2	2	3	4	5	6	7	10	
颜色 Color	蓝 blue	黑 black	棕 brown	黄绿 yellow green	红 red	黑 black	红 red	黑 black	绿 green	绿黑 green black	蓝 blue	蓝黑 blue black	屏蔽层 shielding layer	
定义 Definition	W	V	U	PE	BK+	BK-	5V	GND	485+	485-	电池+ cell+	电池- cell-	屏蔽线 screening wire	

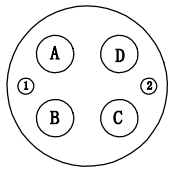

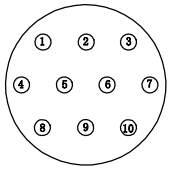

转速-转矩
S-T Characteristic Curve

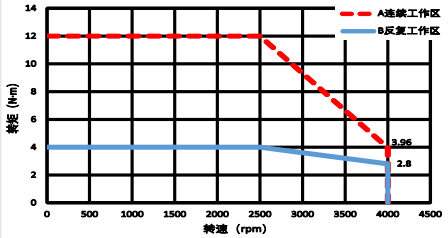

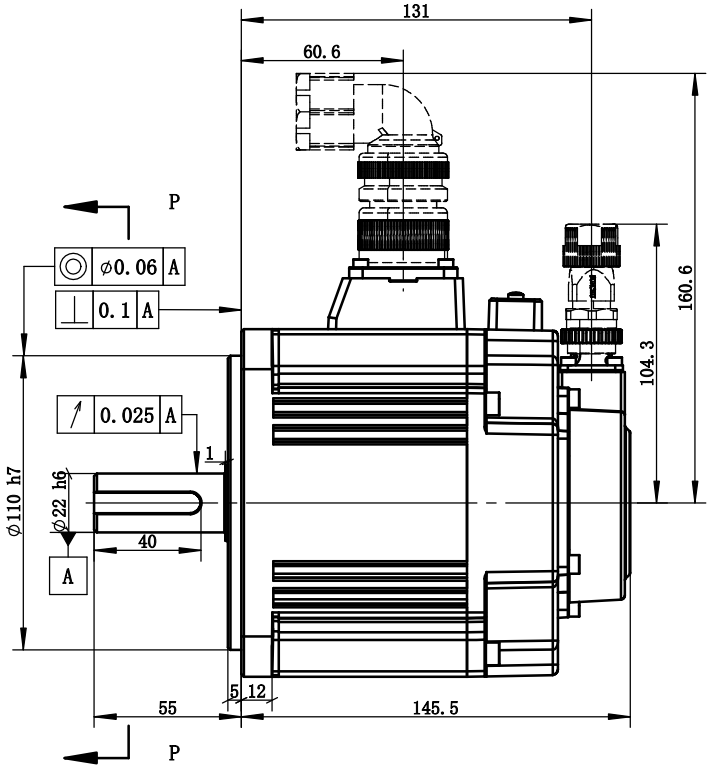

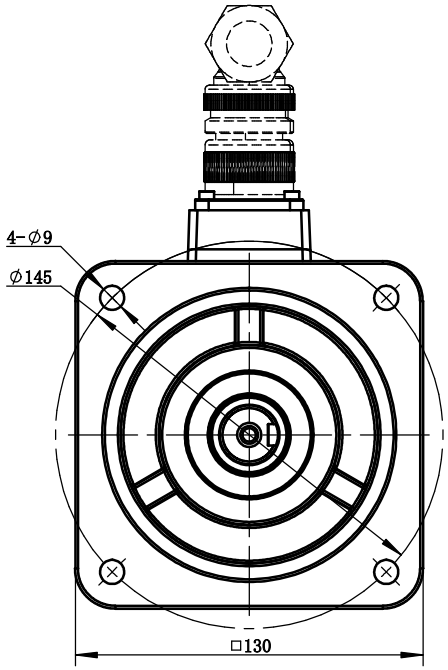

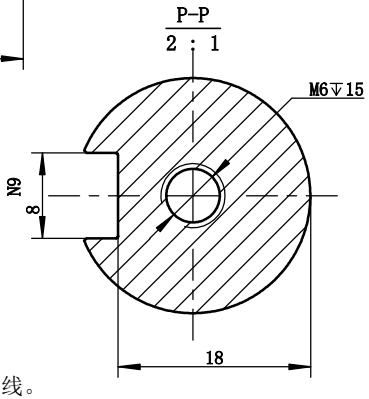

抱闸属性 Properties of the Brake	
额定电压V Rated Voltage	24±10%
静摩擦转矩N·m Static Friction Torque	≥15
额定功率W Rated Power	16.9, 20℃
吸引时间ms Suction Time	≤100(出厂时, 20℃) ≤100 (At The Factory, 20℃)
释放时间ms Release Time	≤60(出厂时, 20℃) ≤60 (At The Factory, 20℃)
吸引电压V Pickup Voltage	≤DC16.8 (出厂时, 20℃) ≤DC16.8 (At The Factory, 20℃)
释放电压V Release Voltage	≥DC1 (出厂时, 20℃) ≥DC1 (At The Factory, 20℃)
回转背隙° Rotational Clearance	≤0.5° (20%额定扭矩测试) ≤0.5° (20% Rated Torque Test)
备注 Remark	保持制动用, 禁止当刹车使用 Used to maintain braking,prohibit the use of brakes
电机参数 Electric Machine Parameter	
型号 Specification And Type	MS6G-130CM25BZ2-41P0
惯量规格 Specification Of Inertia	中惯量 Moment Of Inertia
额定功率kW Rated Power	1
额定转矩N·m Rated Torque	4
瞬时最大转矩N·m Instantaneous Maximum Torque	12
额定电流Arms Rated Current	3.2
瞬时最大电流Arms Instantaneous Maximum Current	9.6
额定转速rpm Rated Rotation Speed	2500
最高转速rpm Maximum Rotation Speed	4000
转动惯量kg·m² Rotor Moment Of Intertia	8430×10^-7
电压等级V Voltage Level	380
编码器规格 Specification Of The Encoder	17bit
径向允许负载N Radial allowable load	686
轴向允许负载N Axial allowable load	196
耐压等级 Pressure Class	1800V 60S
绝缘电阻 Insulation Resistance	100MΩ DC500V以上 More Than 100MΩ DC500V
绝缘等级 Class Of Insulation	F
防护等级 Protection Level	IP 67(不含轴端) IP 67(Exclude Shaft End)
使用环境湿度RH Humidity Of Use Environment	20%~90%RH(不结露) 20%~90%RH(Non-dewfall)
使用环境温度℃ Operating Ambient Temperature	-10℃~40℃(不结冻) -10℃~40℃(Non-frozen)
储存湿度RH Storage Humidity	20%~90%RH(不结露) 20%~90%RH(Non-dewfall)
储存温度℃ Storage Temperature	-20℃~60℃
冷却方式 Cooling Type	自然冷却 Natural cooling

注：拿取电机应手握电机壳体本体，严禁拉拽电机动力线、编码器引出线。
严禁敲打电机任何位置，轻拿轻放。

Note: Take the motor should hold the motor shell body.It is strictly prohibited to pull the power line of the motor and the lead line of the encoder. It is strictly prohibited to tap the motor,take and put it lightly.

版本 Edition	更改方式 Modalities of the change	日期 Date	签字 Signature	更改说明 Description of the change
1	新归档			

设计 Designed			标准化 Standardized		
校对 Proofread			会签 Countersign		
审核 Checked			会签 Countersign		
工艺 Processed			批准 Approved		

阶段标记 Stage Mark	版本 Edition	重量 Weight	比例 Scale
B	1	6.7kg	1:2

共 1 张 第 1 张 Page 1 of 1

XINJE 无锡信捷电气股份有限公司 Wuxi Xinje Electric Co.,Ltd

1kW伺服电机

MS6G-130CM25BZ2-41P0