| 动力引出线 Power Connector | | | | | 抱闸引出线 Brake Connector | |
|---|---|---|---|---|---|---|
| 位号 Terminal Number | A | B | C | D | 1 | 2 |
| 颜色 Color | 棕 brown | 黑 black | 蓝 blue | 黄绿 yellow green | 红 red | 黑 black |
| 定义 Definition | U | V | W | PE | BK+ | BK- |

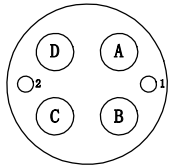


| 编码器引出线 Encoder Connector | | | | | | | | |
|---|---|---|---|---|---|---|---|---|
| 1 | 3 | 4 | 6 | 7 | 8 | 9 |
| 屏蔽层 shielding layer | 橙 orange | 蓝 blue | 灰 gray | 棕 brown | 红 red | 绿 green |
| 屏蔽线 screening wire | 485- | 485+ | GND | 电池- cell- | 5V | 电池+ cell+ |

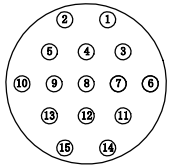


转速-转矩
S-T Characteristic Curve

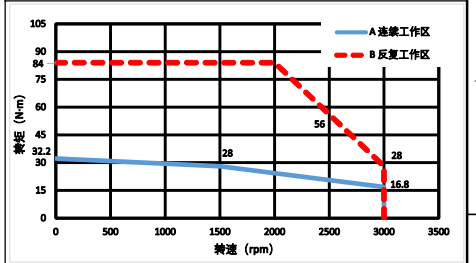


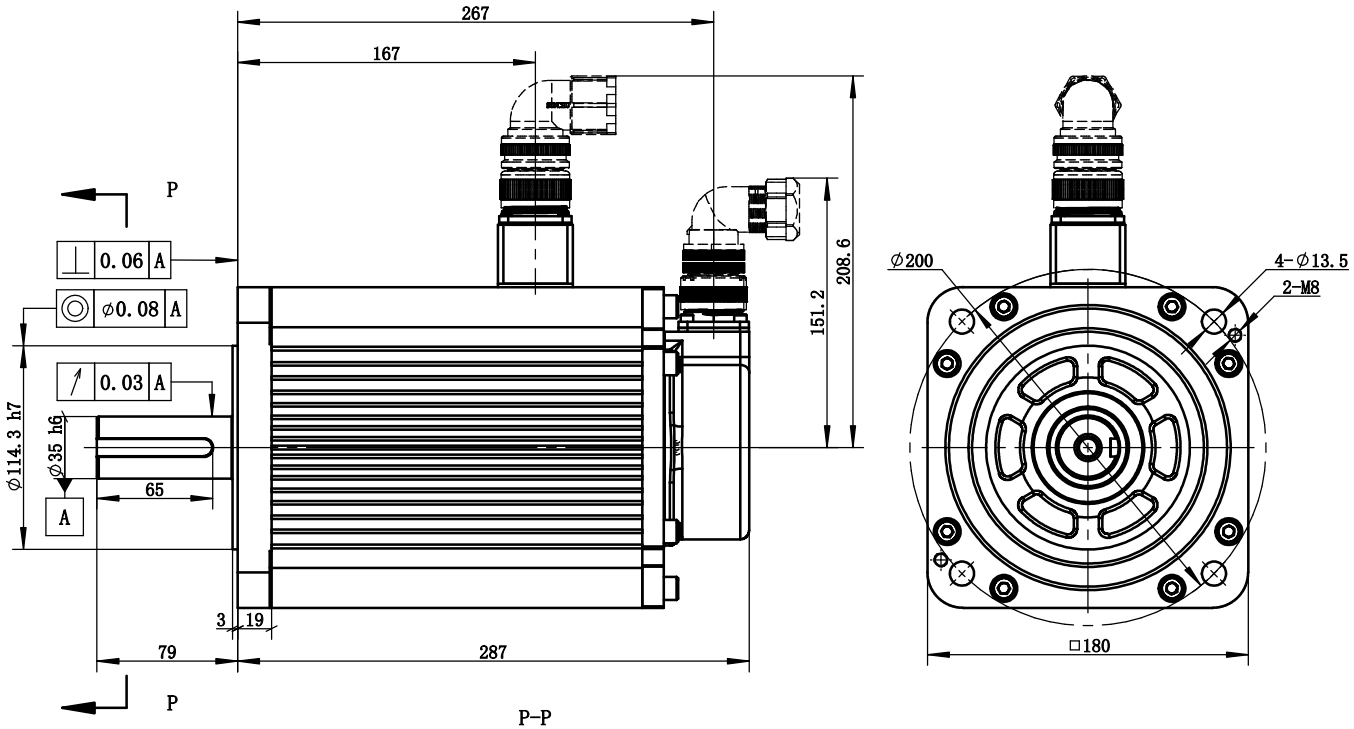


P-P
1 : 1

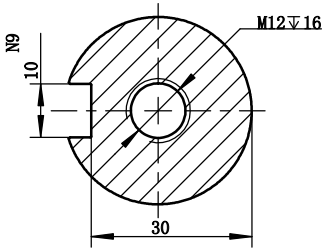


| 抱闸属性 Properties of the Brake | |
|---|---|
| 额定电压V Rated Voltage | DC24±10% |
| 静摩擦转矩N·m Static Friction Torque | ≥58 |
| 额定功率W Rated Power | 30, 20℃ |
| 吸引时间ms Suction Time | ≤180(出厂时, 20℃) ≤180 (At The Factory, 20℃) |
| 释放时间ms Release Time | ≤80(出厂时, 20℃) ≤80 (At The Factory, 20℃) |
| 吸引电压V Pickup Voltage | ≤DC16.8 (出厂时, 20℃) ≤DC16.8 (At The Factory, 20℃) |
| 释放电压V Release Voltage | ≥DC1.5 (出厂时, 20℃) ≥DC1.5 (At The Factory, 20℃) |
| 回转背隙' Rotational Clearance | <0.5° (20%额定扭矩测试) <0.5° (20% Rated Torque Test) |
| 备注 Remark | 保持制动用，禁止当刹车使用 Used to maintain braking,prohibit the use of brakes |
| 电机参数 Electric Machine Parameter | |
| 型号 Specification And Type | MS6H-180CM15BZ2-44P4 |
| 惯量规格 Specification Of Inertia | 高惯量 High Inertia |
| 额定功率kW Rated Power | 4.4 |
| 额定转矩N·m Rated Torque | 28 |
| 瞬时最大转矩N·m Instantaneous Maximum Torque | 84 |
| 额定电流Arms Rated Current | 16.5 |
| 瞬时最大电流Arms Instantaneous Maximum Current | 49.5 |
| 额定转速rpm Rated Rotation Speed | 1500 |
| 最高转速rpm Maximum Rotation Speed | 3000 |
| 转动惯量kg·m² Rotor Moment Of Intertia | 78040×10^-7 |
| 电压等级V Voltage Level | 380 |
| 编码器规格 Specification Of The Encoder | 17bit |
| 径向允许负载N Radial allowable load | 1470 |
| 轴向允许负载N Axial allowable load | 490 |
| 耐压等级 Pressure Class | 1800V 60S |
| 绝缘电阻 Insulation Resistance | 100MΩ DC500V以上 More Than 100MΩ DC500V |
| 绝缘等级 Class Of Insulation | F |
| 防护等级 Protection Level | IP 65 (不含轴端) IP 65(Exclude Shaft End) |
| 使用环境湿度RH Humidity Of Use Environment | 20%~90%RH (不结露) 20%~90%RH (Non-dewfall) |
| 使用环境温度℃ Operating Ambient Temperature | -10℃~40℃ (不结冻) -10℃~40℃ (Non-frozen) |
| 储存湿度RH Storage Humidity | 20%~90%RH (不结露) 20%~90%RH (Non-dewfall) |
| 储存温度℃ Storage Temperature | -20℃~60℃ |
| 冷却方式 Cooling Type | 自然冷却 Natural Cooling |

注：拿取电机应手握电机壳体本体，严禁拉拽电机动力线、编码器引出线。
严禁敲打电机任何位置，轻拿轻放。

Note: Take the motor should hold the motor shell body.It is strictly prohibited to pull the power line of the motor and the lead line of the encoder. It is strictly prohibited to tap the motor,take and put it lightly.

| 版本 Edition | 更改方式 Modalities of the change | 日期 Date | 签字 Signature | 更改说明 Description of the change |
|---|---|---|---|---|
| 1 | 新归档 | | | |

| | | | | | | | | |
|---|---|---|---|---|---|---|---|---|
| 设计 Designed | | | 标准化 Standardized | | | 阶段标记 Stage Mark | 版本 Edition | 重量 Weight | 比例 Scale |
| 校对 Proofread | | | 会签 Countersign | | | | | | |
| 审核 Checked | | | 会签 Countersign | | | B | 1 | 27.2kg | 1:3 |
| 工艺 Processed | | | 批准 Approved | | | 共 1 张 | 第 1 张 | Page 1 of 1 | |

XINJE 无锡信捷电气股份有限公司 Wuxi Xinje Electric Co.,Ltd

# 4.4kW伺服电机

MS6H-180CM15BZ2-44P4