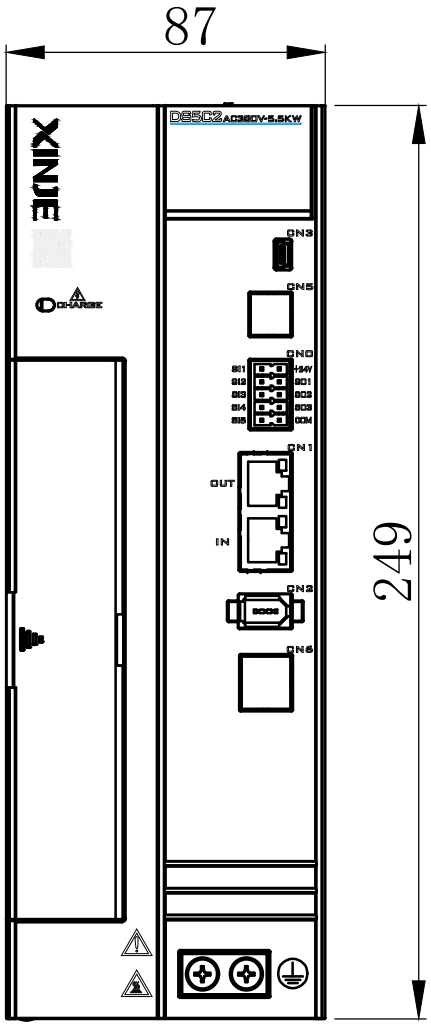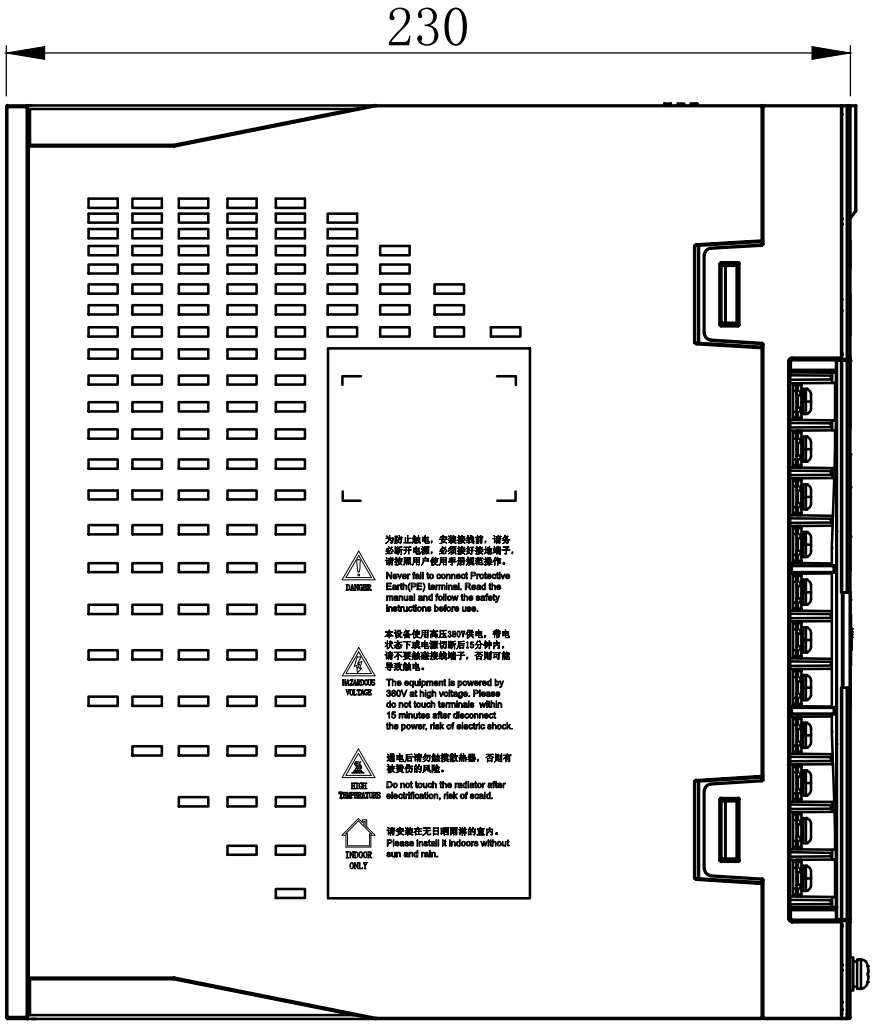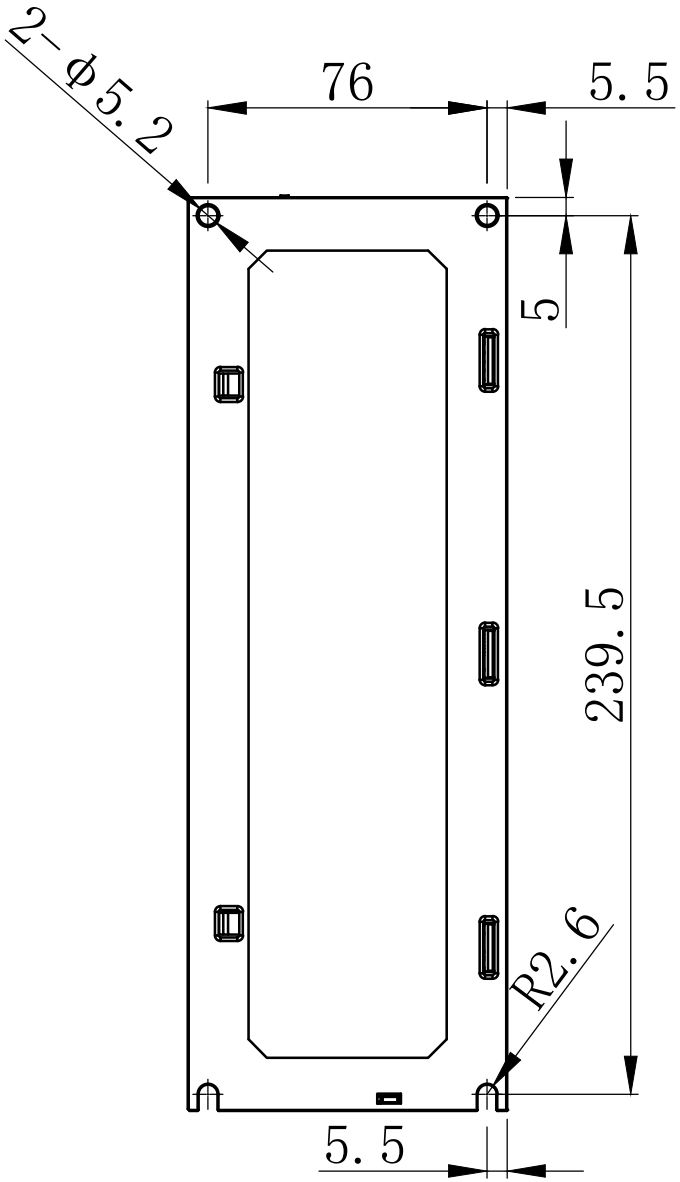MODEL:DS5C2-45P5-PTA-FH