XINJE

DS5L2-42P3-PTA servo drive wiring diagram

Product Selection Support

Email : xinje3858@163.com

- Use external braking resistor
  Connect the braking resistor to the P+ and C terminals, and remove the P+ and D short circuits;

  P0-25=power value, P0-26=resistance value

External regenerative resistance : (recommended resistance value)	**55Ω -75Ω**
Minimum resistance : (no less than this value)	**55Ω**
External regenerative resistance : (recommended power value)	**Above 1000W**

- Use built-in braking resistor
  Short circuit P+ and D terminals, disconnect P+ and C , bulit-in brake unit : 80W60Ω

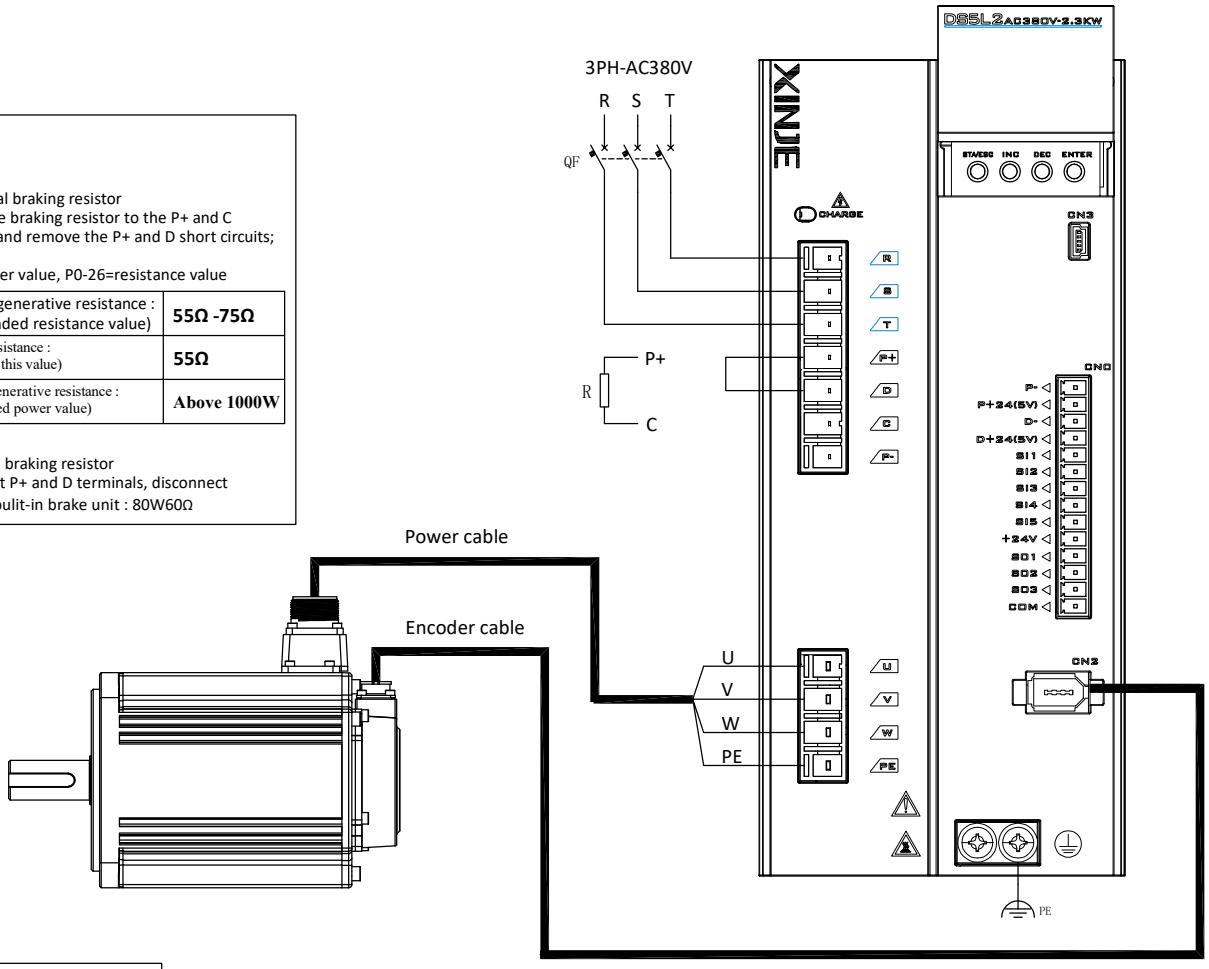

- The power supply voltage range of P-/P+ 24V and D-/D+ 24V is 18V~25V. The power supply voltage range of P-/P+5V, D-/D+5V is 3.3V~5V. There may be abnormal pulse and direction if the voltage is lower than 18V/3.3V.
- Servo pulse input port is ON at 10mA.
- In order to resist interference, twisted-pair shielding wire must be used. And the instruction signal cable is recommended to be within 3 meters. It is recommended to shield the 0V of the controller and ensure good grounding of the controller.
- If the pulse frequency of P+D sent by the controller is greater than 100kHz, a 500Ω 2W pull-up resistor needs to be connected in parallel at the PLC pulse output terminal, or a 2KΩ 1W pull-up resistor needs to be connected in parallel at the servo pulse receiving terminal.

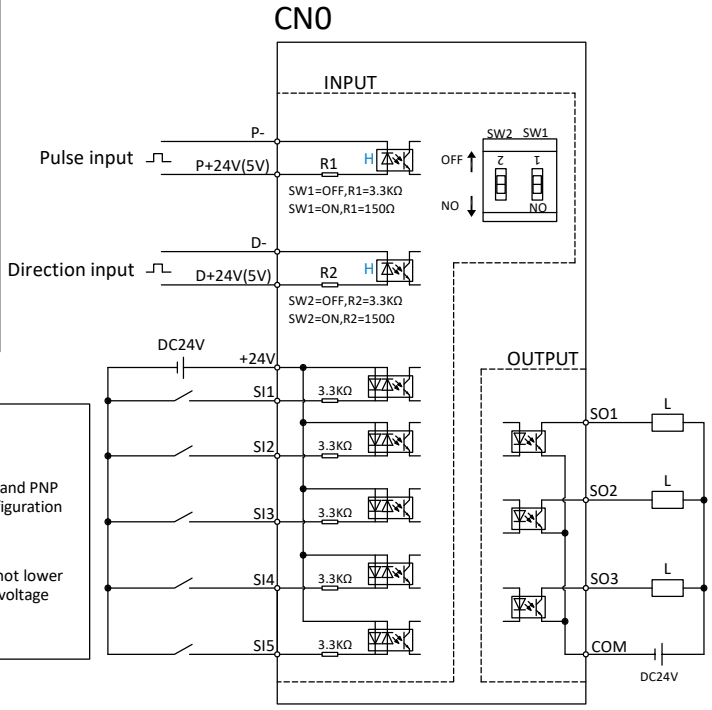

- All SI terminals support both NPN and PNP configurations, with only one configuration being usable at a time.
- Typical voltage DC24V, minimum not lower than DC18V, maximum allowable voltage not higher than DC28V.

- SO (all) DC 50mA (maximum), supporting 24VDC, with a maximum of 30VDC. The required current for the brake is relatively high. When controlling the brake motor through SO, please use an intermediate relay Typical voltage DC24V, minimum not lower than DC18V, maximum allowable voltage not higher than DC28V.